User Guide
3D printing sample containers for batch-scanning X-ray micro-tomography

Requirements FreeCad 1.1.4 : https://www.freecad.org/
Source files : https://gitlab.in2p3.fr/pwils/sampleholder





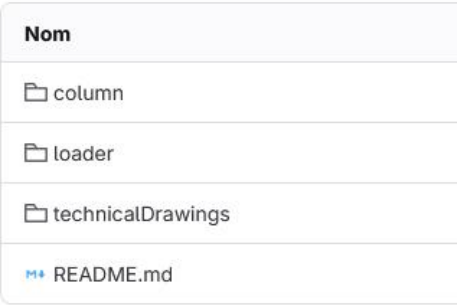

Contents

A. How to get a mesh from a FreeCad file ?
B. Overall design
1. Column configuration (diameters from 5 to 20 cm) – page 5
2. Sample loader configuration (diameters from 1.5 to 4.5 cm) – page 19

Contact patricia.wils@mnhn.fr

Designed for a standard 3D print (PLA 0.2mm).
Due to printing margins of error, the design is set to be tight on purpose and some sanding might be needed.

A. How to get a mesh from a FreeCad file ?

Each file is saved as a FreeCad document (.FCstd format)

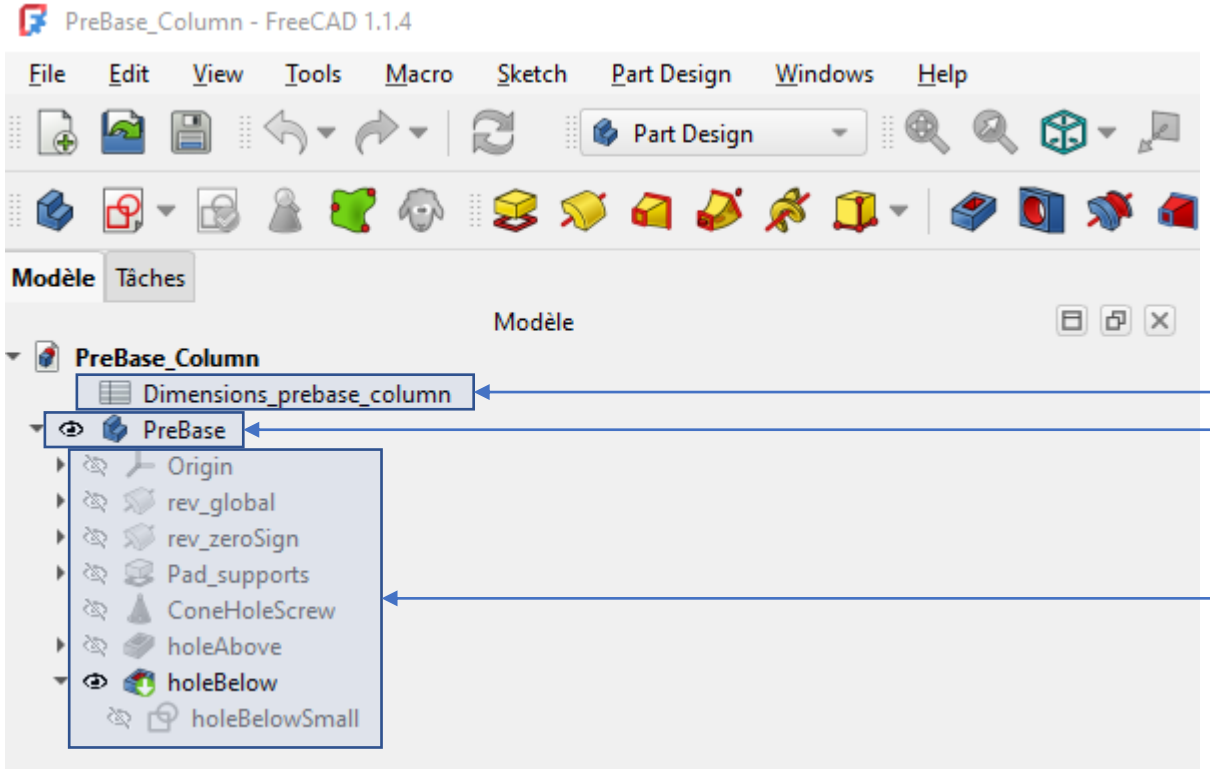

Dimensions **Spreadsheet**
Contains the parameters
(hard-coded or user-defined)

Main Part
The one to export (see next page)

Part design
Sketches, additive and subtractive tools
Do not edit

A. How to get a mesh from a FreeCad file ?

- Open the .FCstd file
- **Edit the user-defined parameters B2 and E2 (in mm)** in the dimensions spreadsheet if needed

Content | Alias

	A	B	C	D	E	F
1	topLipHeight	10	hard coded			
2	specimenHeight	80	user pick	innerDiameter	80	user pick
3	bottomFullLipHeight	11				
4	smallerRadius	38	B5-B6	zeroSign	2	
5	innerRadius	40		zeroSignBigger	5	
6	outerRadius	42	B5 + B8			
7						
8	lipWallThickest	2				
9	lipWallThinnest	1	B8/2			
10						
11	bottomLipHeight	10	B1			
12						
13	bayonetHeight1/5	2	B1/5			
14	bayonetHeight2/5	4	B1/5*2			
15						
16	partGap	0,20	hard coded			
17	bottomRadiusPartGap	39,80	B5-B16			
18						

A. How to get a mesh from a FreeCad file ?

- Open the .FCstd file
- **Edit the user-defined parameters** in the dimensions spreadsheet if needed

- Open the Mesh workshop
- **Mesh from Shape** the main part
- Set the meshing options and click OK

The mesh appears in the list

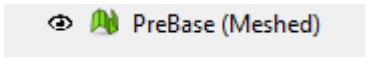

- Right-click on the mesh and **export** it

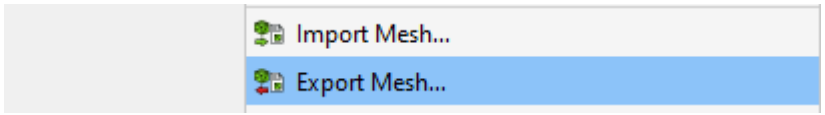

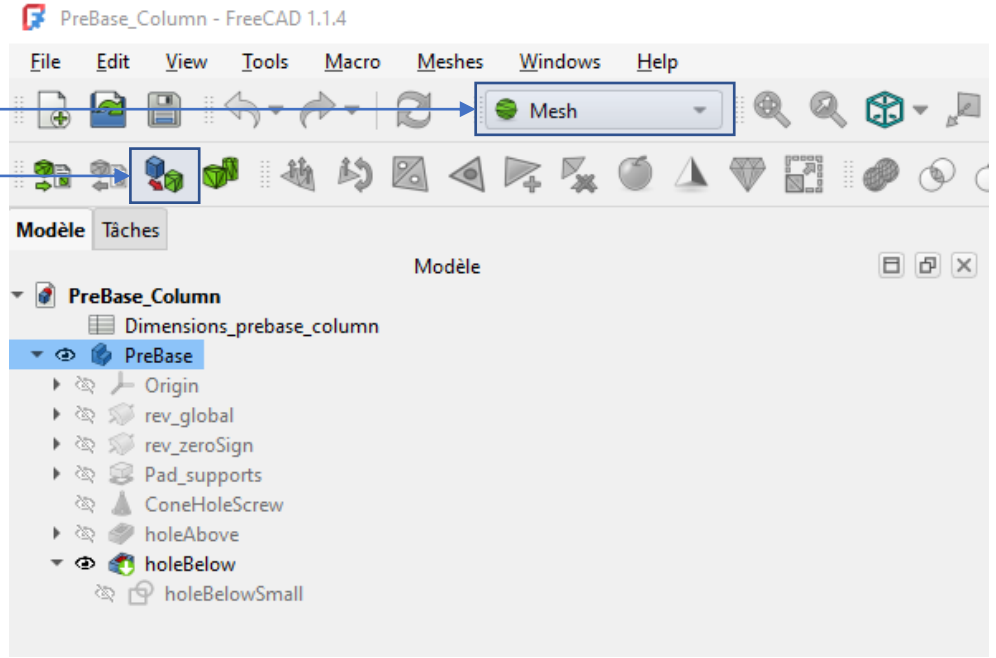

B. Overall design with FreeCad 1.1.4

2 configurations with EasyTom S (Rx Solutions)

1. Column design

Refers to the central rotation platform

PreBase_column – page 7
Base_column – pages 8 to 10
Level_column – pages 11 to 13
Level_column_extension – page 14

SeparatorTwo_column – page 16
SeparatorThree_column – page 17
SeparatorFour_column – page 18

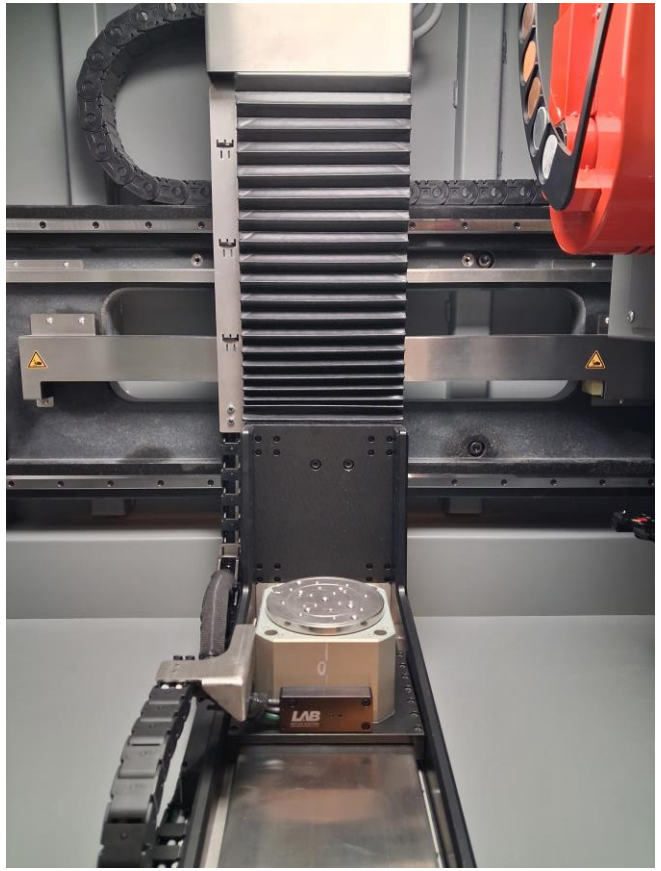

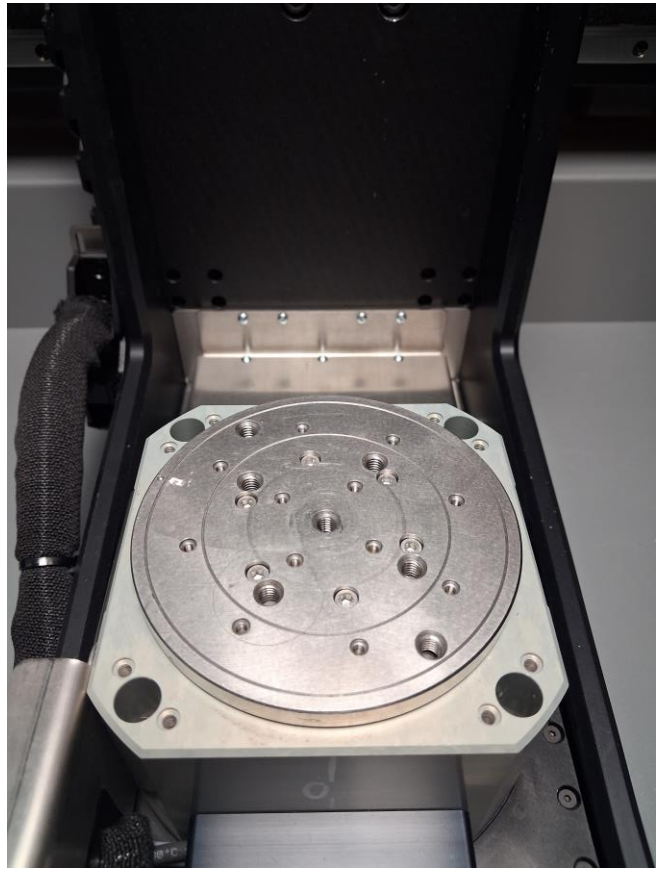

1. Column design

Spreadsheet parameters are indicated in blue in the following pages.
! IMPORTANT ! User should setup innerDiameter E2 and specimenHeight B2 to its needs both in Base_column and Level_column.
partGap B16 is the parameter that controls how tight or loose the parts can move w.r.t each other.
We set it to 0.2mm.

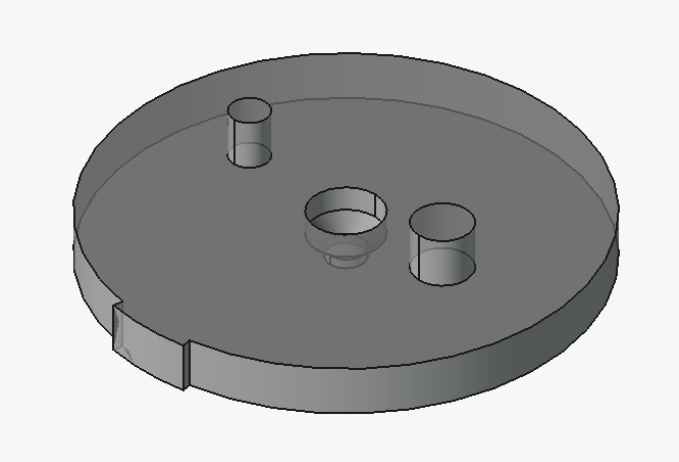

PreBase_column



Base_column



Level_column

1. Column design
PreBase_column

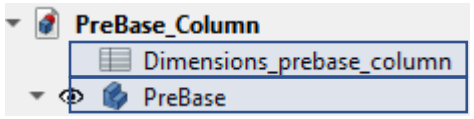

spreadsheet
main part to export



main disk

diameter 10 cm
height 1cm



zero sign

thickness 2mm E4

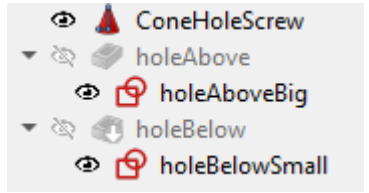

central hole :
fits a screw onto the
rotation platform

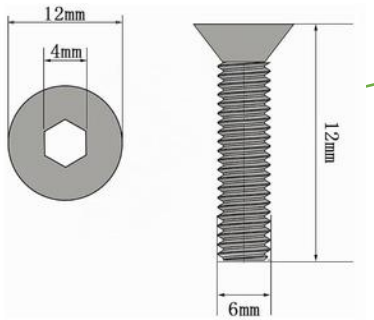

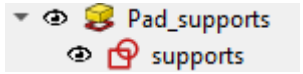

two supports :
fits the base above

diameter 8mm E12
diameter 16mm E13
height 1cm

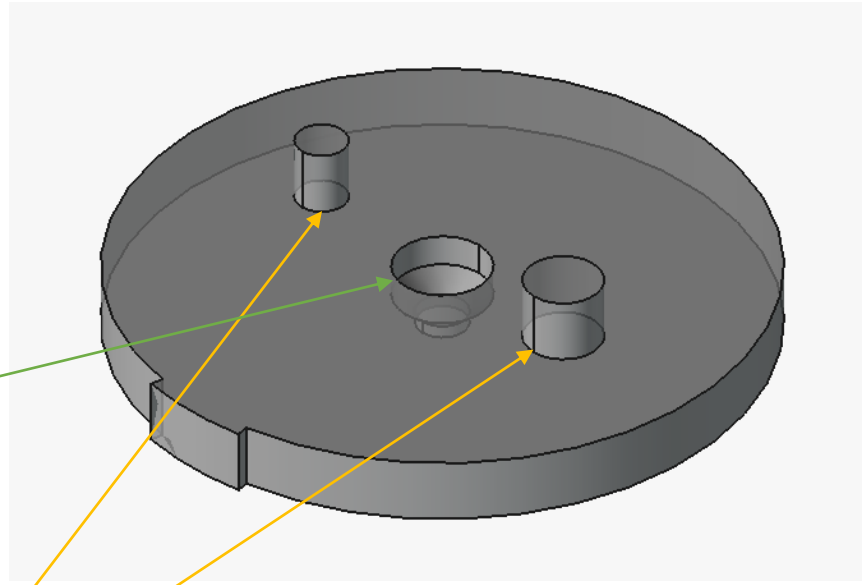

1. Column design
Base_column

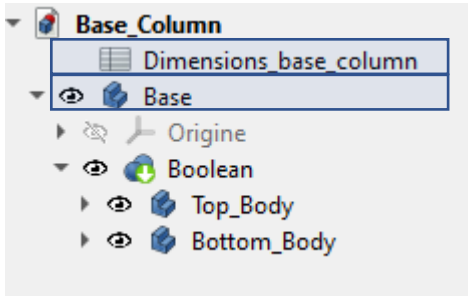

spreadsheet
main part to export

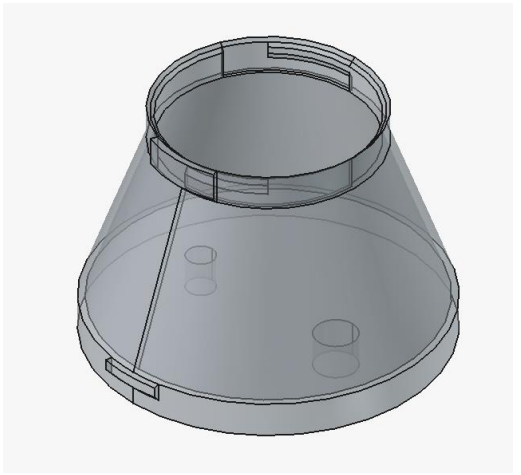



top lid
+ body to raise the sample 7cm
from the rotation platform

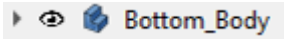

bottom disk
fits on the prebase

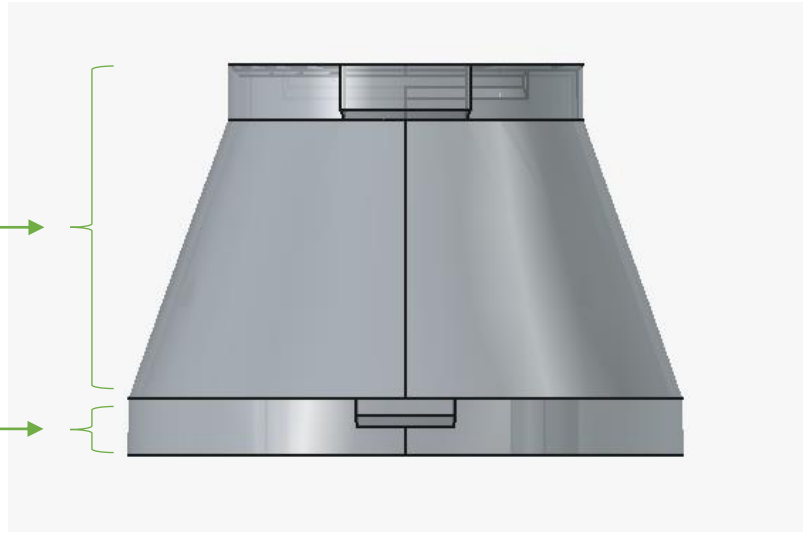

1. Column design
Base_column

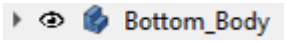

bottom disk that fits onto the prebase

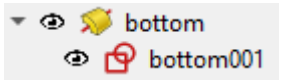

bottom disk

diameter 10 cm E8
height 1cm B11

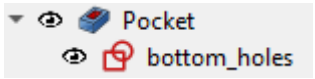

holes to fit the supports from the prebase

diameter 8,2mm E14
diameter 16,2mm E15
height 1cm

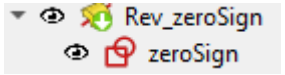

zero sign

thickness 2mm E4
heigth 5mm E5

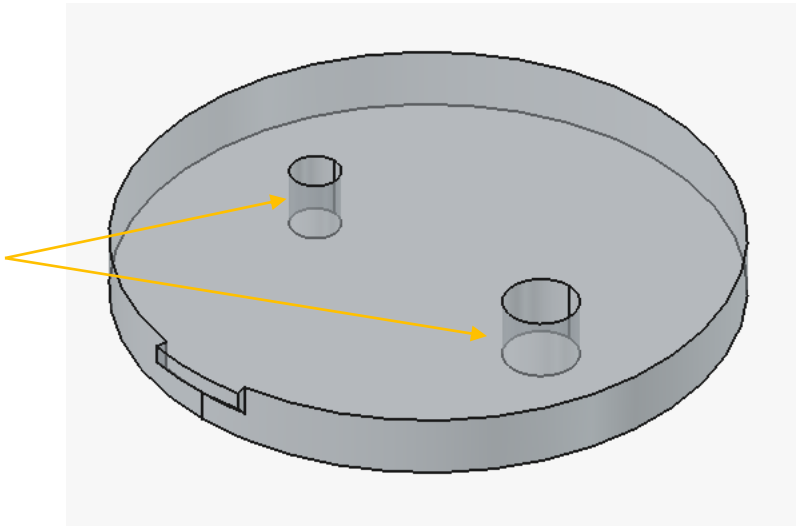

1. Column design
Base_column



top lid
+ central body to raise the sample 7cm from the rotation platform



top lid
with bayonet

inner diameter user defined E2
height 1cm B1
wall thicknesses :
- thin 1mm B9
- thick 2mm B8

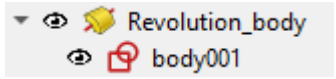

central body

height 5cm E9

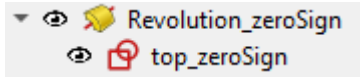

zero sign

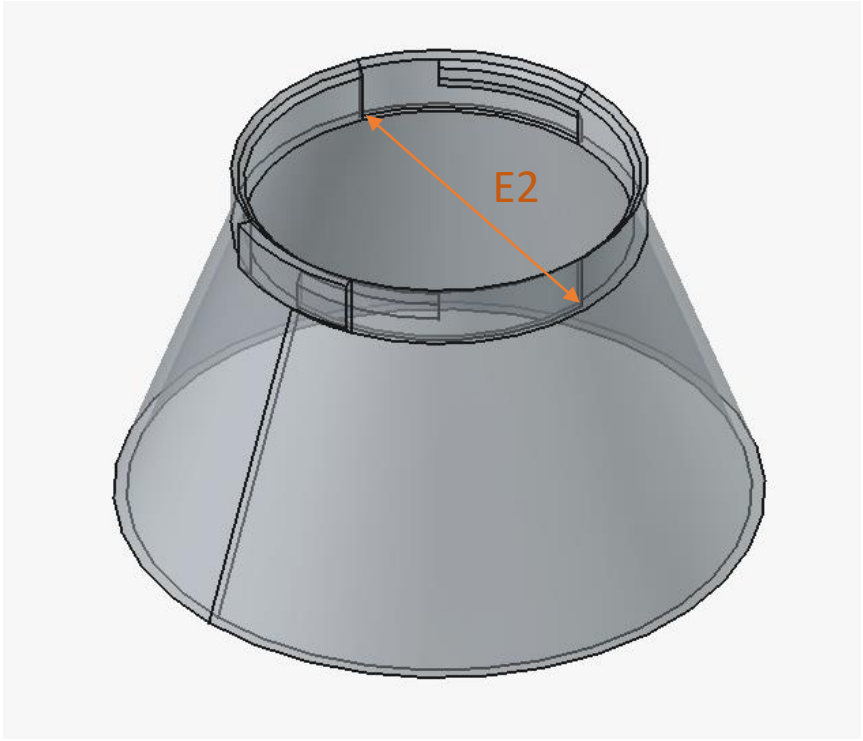

1. Column design
Level_column

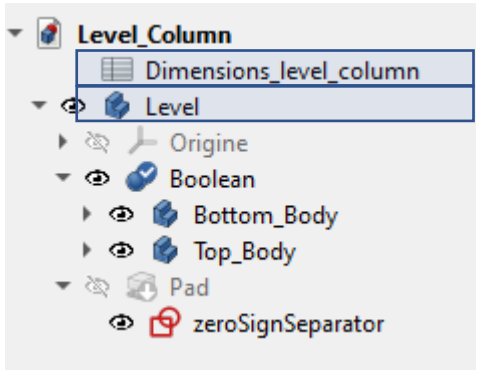

spreadsheet
main part to export



top lid
+ cylinder to fit the samples



bottom lid fits on the base
or another level

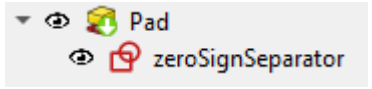

zero mark for the separator





1. Column design
Level_column



bottom disk that fits on the base or another level
zero mark for the separator



bottom lid

diameter user defined E2
height 1cm B11

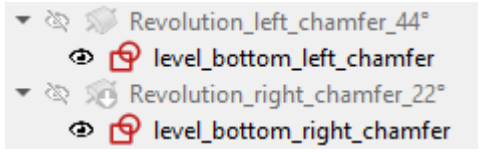

chamfers to fit
into the bayonet

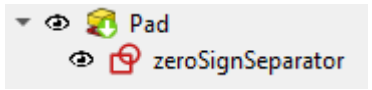

zero mark
for the separator

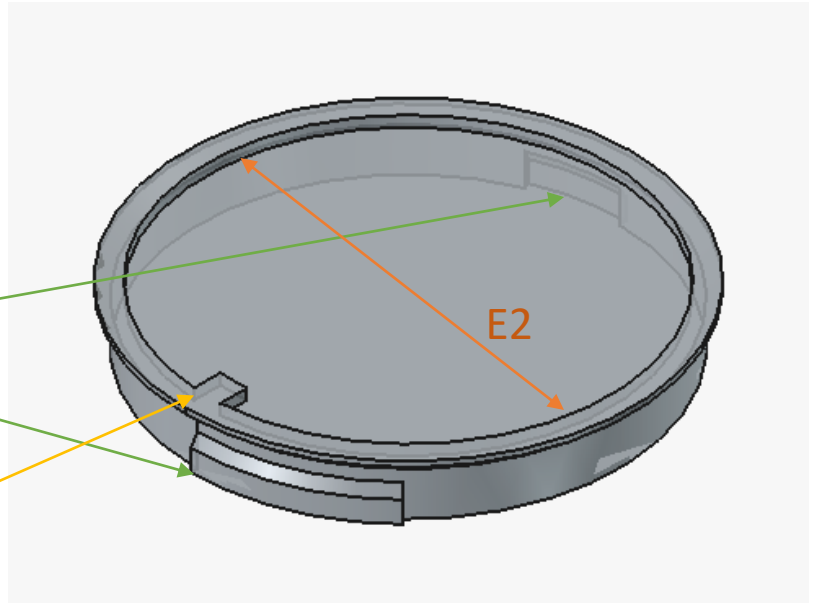

1. Column design
Level_column



top lid + cylinder to fit the samples

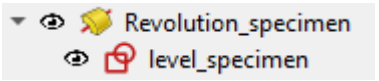

cylinder to fit the samples

inner diameter user defined E2
sample height user defined B2

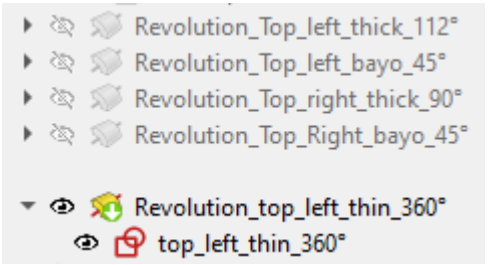

top lid with bayonet

diameter user defined E2
height 1cm B1
wall thicknesses :
- thin 1mm B9
- thick 2mm B8

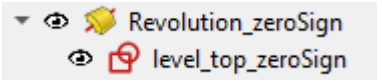

zero sign

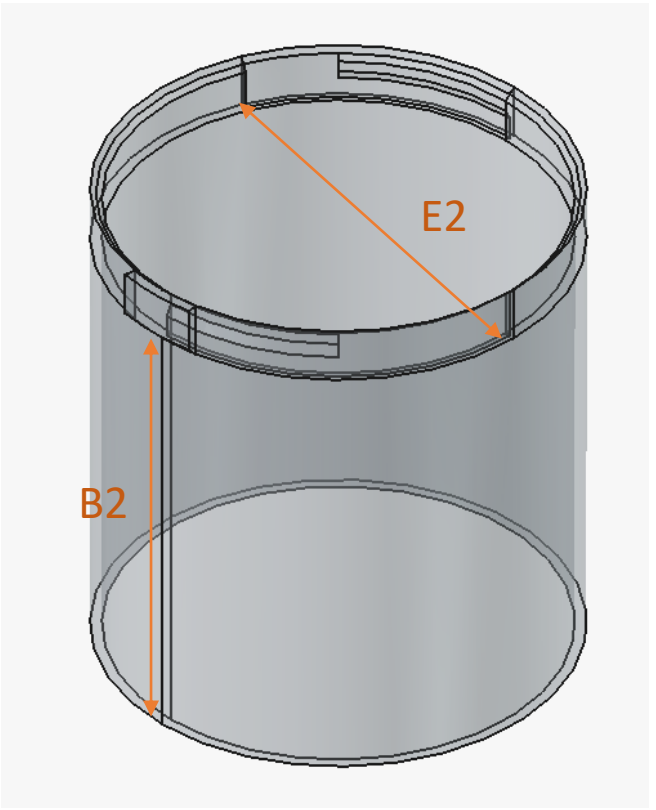

1. Column design
Level_column_extension

This part is designed to fit on another level in order to accomodate for longer samples.
Same parameters as in Level_column : inner diameter E2 and sample height B2

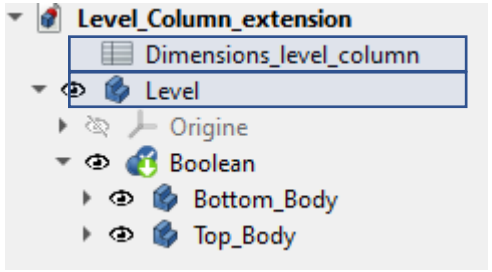

spreadsheet
main part to export



top lid
+ cylinder to fit the samples

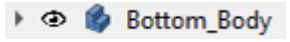

bottom lid fits on another level



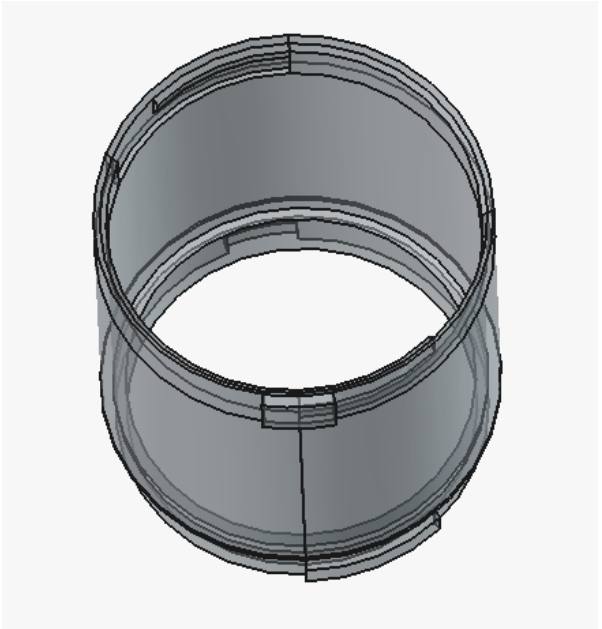

Overall design with FreeCad 1.1.4

1. Column design

Several samples may fit inside a level using separators. Separators have a zero mark to fit unequivocally inside the level and ensure that the position of the sample is fixed w.r.t the rotation platform, for later automatization.
Holes are cut to let the user distinguish the partitions from above when positioning the samples inside the level.
! IMPORTANT ! User should setup innerDiameter E2 and specimenHeight B2 with similar values as in Level_Column.
Margins are computed within FreeCad.

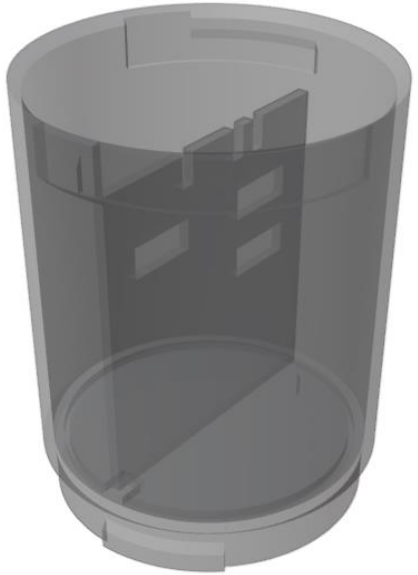

SeparatorTwo
Inside a level

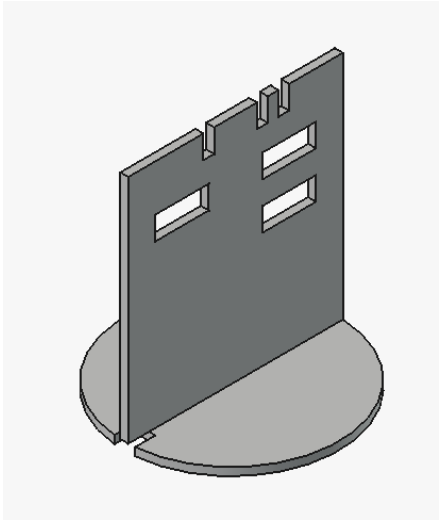

SeparatorTwo_column

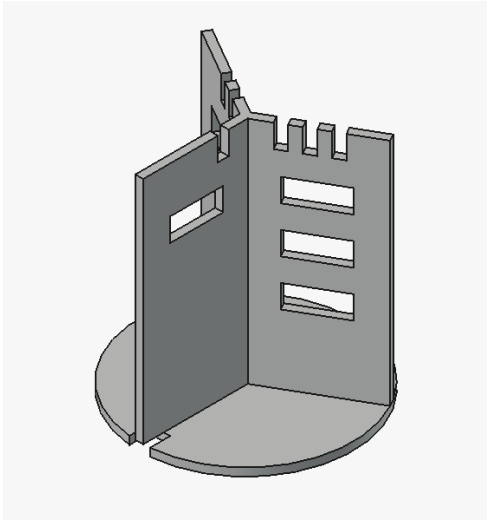

SeparatorThree_column

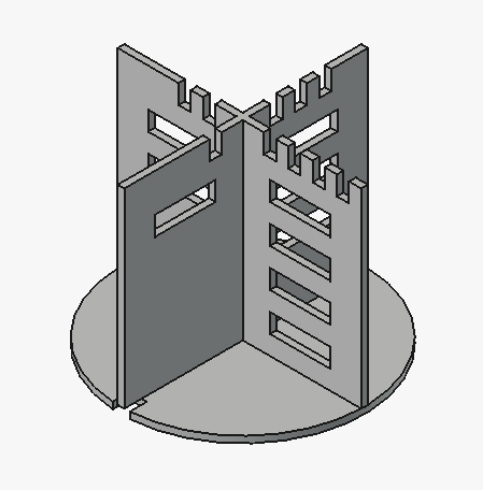

SeparatorFour_column

1. Column design
SeparatorTwo_column

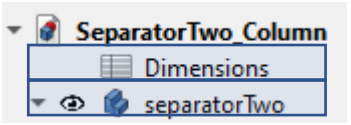

spreadsheet
main part to export

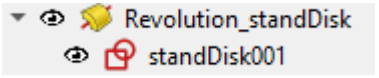

stand disk

diameter : formula
inner diameter user defined E2 – margins

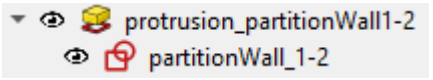

wall to discriminate samples

height : formula
sample height user defined B2 – margins



holes to check the sample positioning

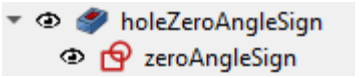

squared zero sign for a correct positioning inside a level

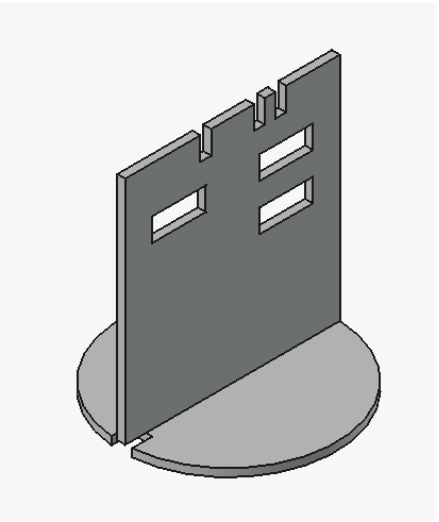

1. Column design
SeparatorThree_column

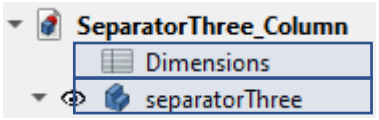

spreadsheet
main part to export

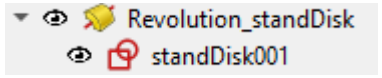

stand disk

diameter : formula
inner diameter user defined E2 – margins

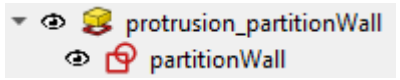

wall to discriminate samples

height : formula
sample height user defined B2 – margins

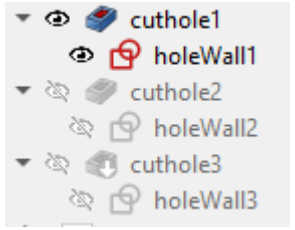

holes to check the sample positioning

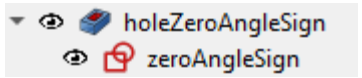

squared zero sign for a correct positioning inside a level

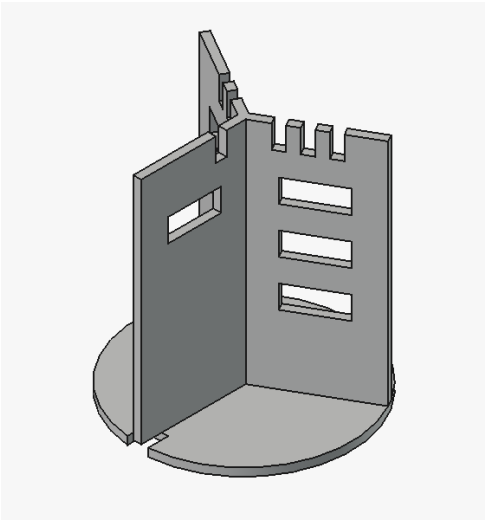

1. Column design
SeparatorFour_column

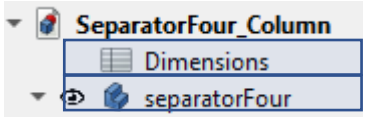

spreadsheet
main part to export

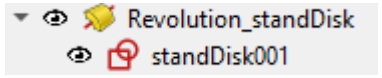

stand disk

diameter : formula
inner diameter user defined E2 – margins



wall to discriminate samples

height : formula
sample height user defined B2 – margins

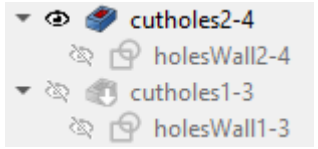

holes to check the sample positioning

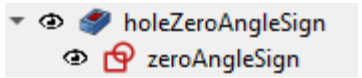

squared zero sign for a correct positioning inside a level

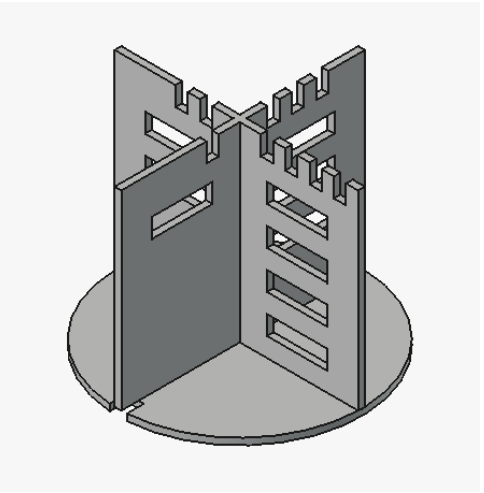

B. Overall design with FreeCad 1.1.4

2 configurations with EasyTom S (Rx Solutions)

2. Loader design

Refers to the sample loader

PreBase_loader – page 21
Base_loader – pages 22 to 24
Level_loader – pages 25 to 27

SeparatorTwo_loader – page 29
SeparatorThree_loader – page 30
SeparatorFour_loader – page 31





2. Loader design

Spreadsheet parameters are indicated in blue in the following pages.
! IMPORTANT ! User should setup innerDiameter E2 and specimenHeight B2 to its needs both in Base_loader and Level_loader files.
partGap B16 is the parameter that controls how tight or loose the parts can move w.r.t each other.
We set it to 0.1mm.

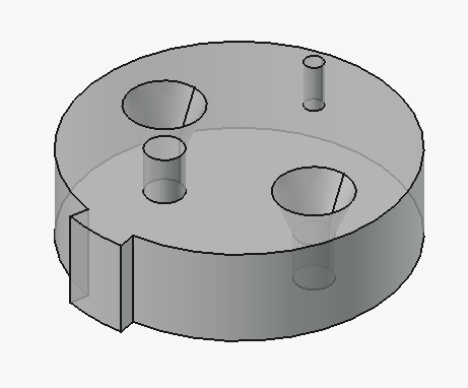

PreBase_loader

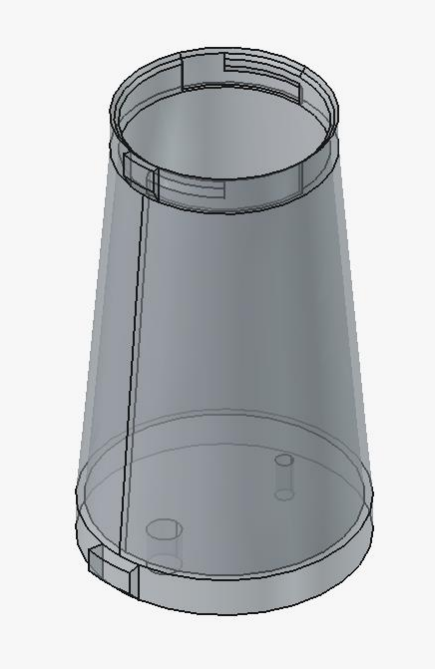

Base_loader



Level_loader

2. Loader design
PreBase_loader

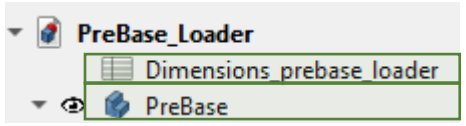

spreadsheet
main part to export



main disk

diameter 3.5 cm
height 1cm



zero sign

thickness 2mm E4

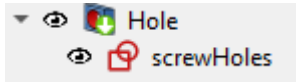

lateral holes :
fit two screws onto the sample loader platform

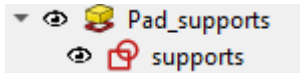

two supports :
fits the base above

diameter 2mm E12
diameter 4mm E13
height 1cm

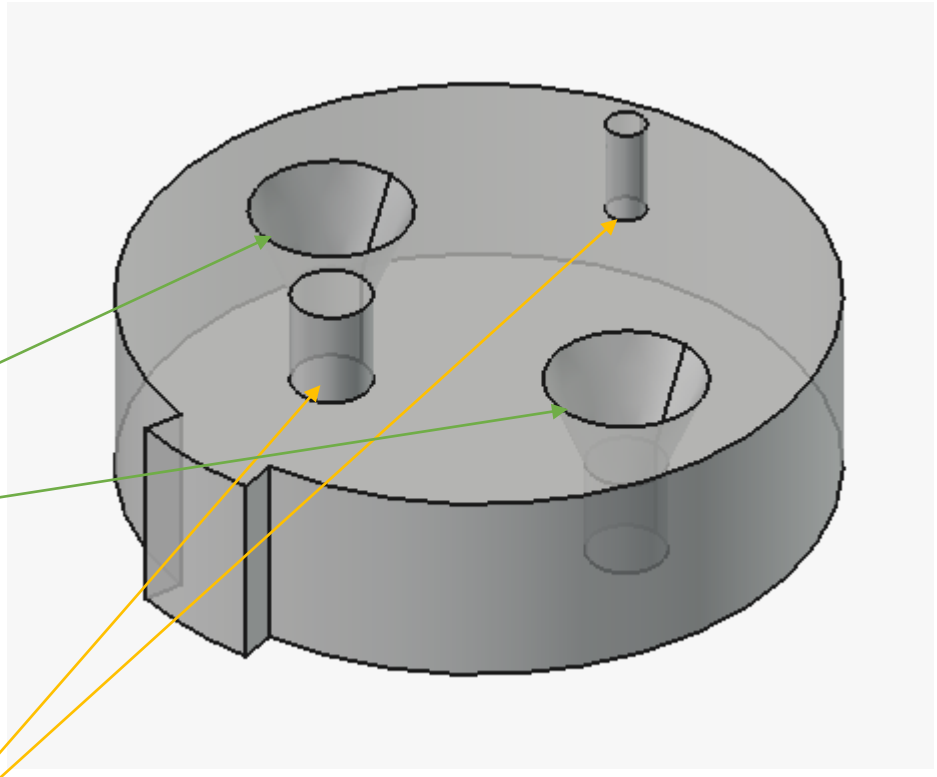

2. Loader design
Base_loader

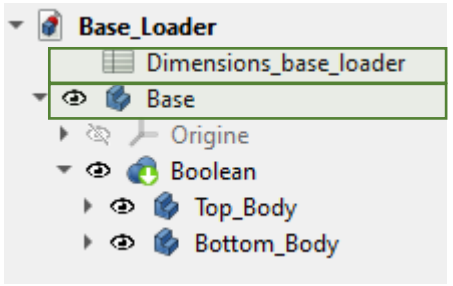

spreadsheet
main part to export



top lid
+ body to raise the sample 7cm
from the rotation platform

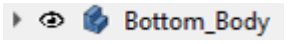

bottom disk
fits on the prebase



2. Loader design
Base_loader

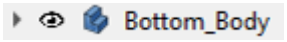

bottom disk that fits onto the prebase

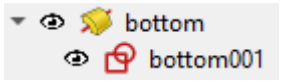

bottom disk

diameter 3.5 cm E8
height 1cm B11

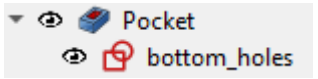

holes to fit the supports from the prebase

diameter 2,2mm E14
diameter 4,2mm E15
height 1cm

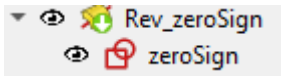

zero sign

thickness 2mm E4
heigth 5mm E5

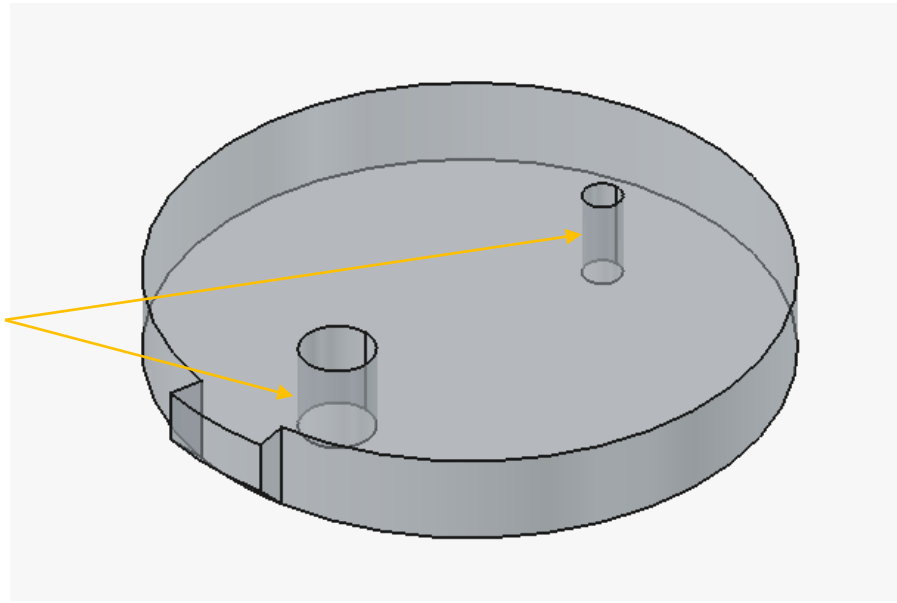

2. Loader design
Base_loader



top lid
+ central body to raise the sample 7cm from the rotation platform



top lid
with bayonet

inner diameter user defined E2
height 1cm B1
wall thicknesses :
- thin 0.5mm B9
- thick 1mm B8

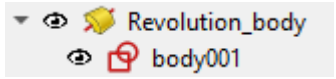

central body

height 5cm E9

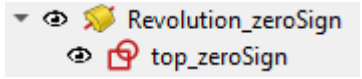

zero sign



2. Loader design
Level_loader

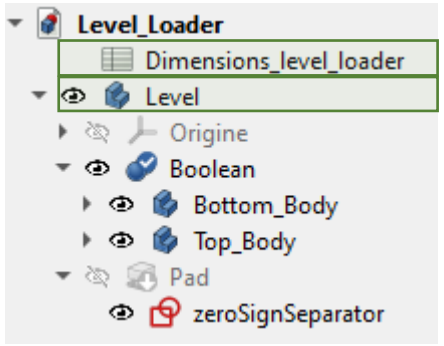

spreadsheet
main part to export



top lid
+ cylinder to fit the samples

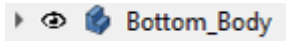

bottom lid fits on the base
or another level

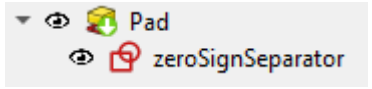

zero mark for the separator





2. Loader design
Level_loader



bottom disk that fits on the base or another level
zero mark for the separator



bottom lid

diameter user defined E2
height 1cm B11

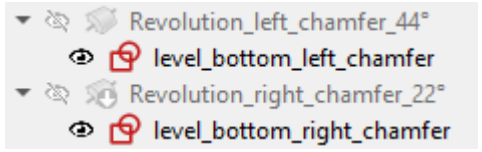

chamfers to fit
into the bayonet

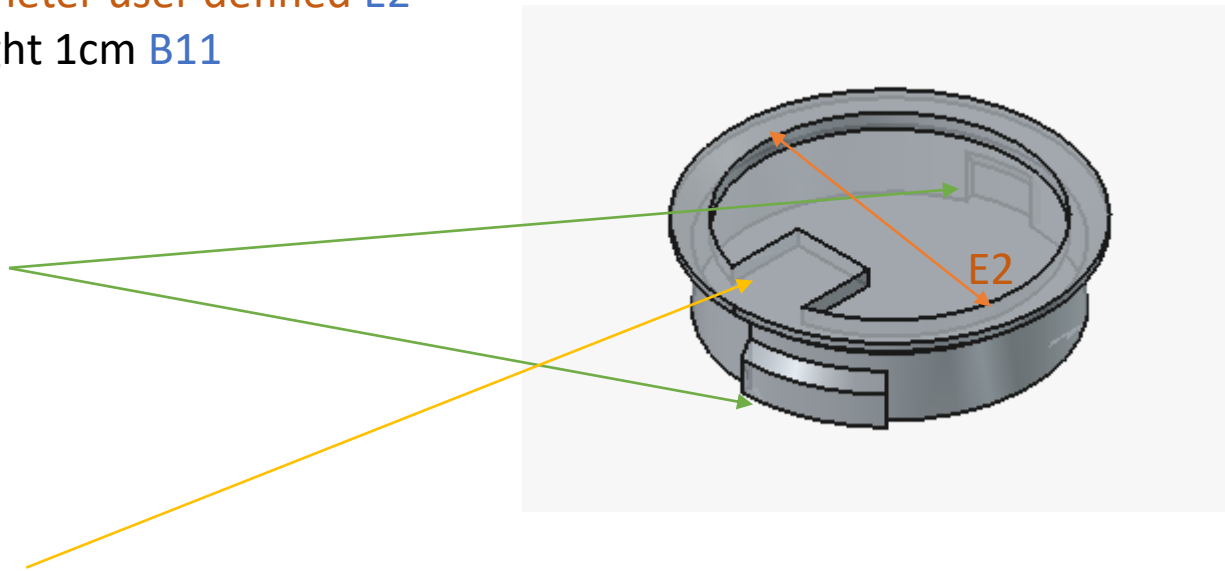

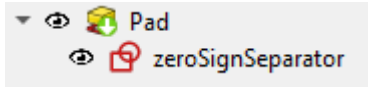

zero mark
for the separator

2. Loader design
Level_loader



top lid + cylinder to fit the samples

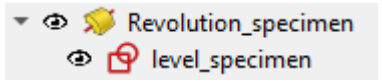

cylinder to fit the samples

inner diameter user defined E2
sample height user defined B2

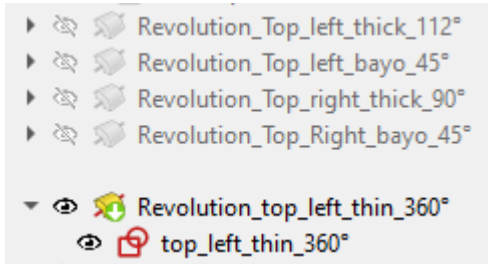

top lid with bayonet

diameter user defined E2
height 1cm B1
wall thicknesses :
- thin 0.5mm B9
- thick 1mm B8

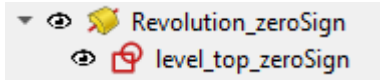

zero sign

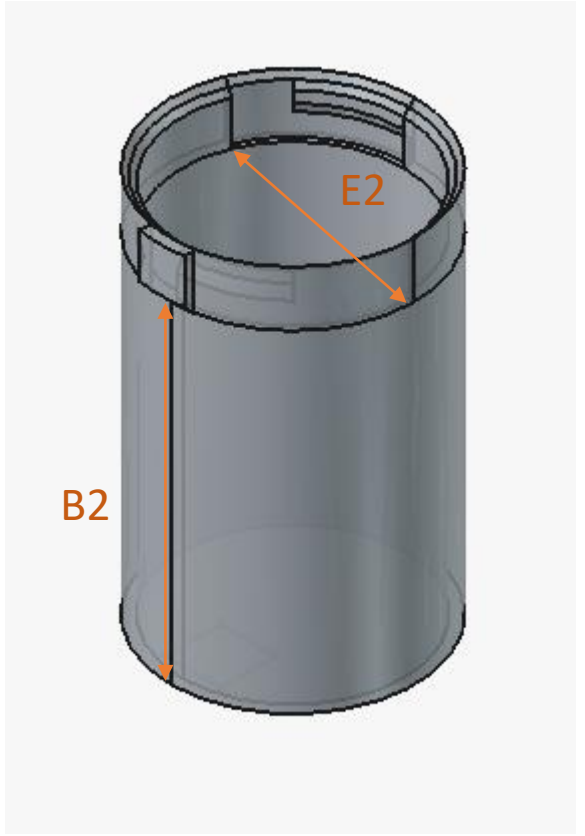

Overall design with FreeCad 1.1.4

2. Loader design

Several samples may fit inside a level using separators. Separators have a zero mark to fit unequivocally inside the level and ensure that the position of the sample is fixed w.r.t the rotation platform, for later automatization.

Holes are cut to let the user distinguish the partitions from above when positioning the samples inside the level.

! IMPORTANT ! User should setup innerDiameter E2 and specimenHeight B2 with similar values as in Level_Column.

Margins are computed within FreeCad.

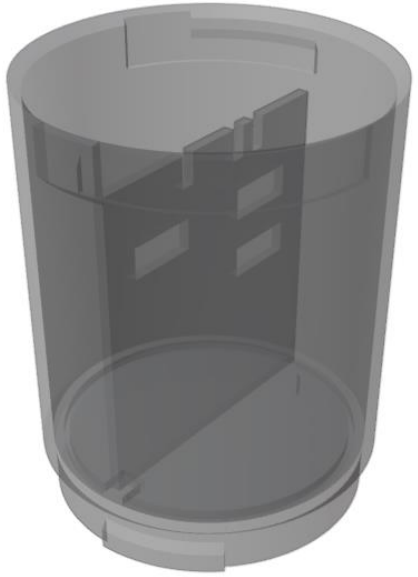

SeparatorTwo
Inside a level

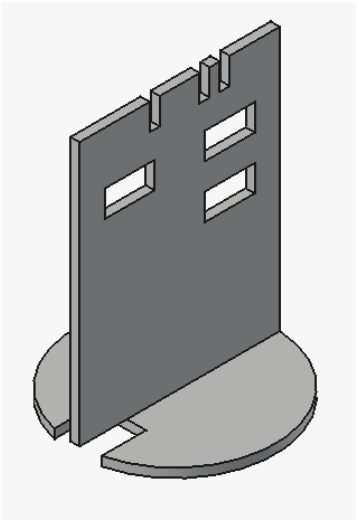

SeparatorTwo_loader

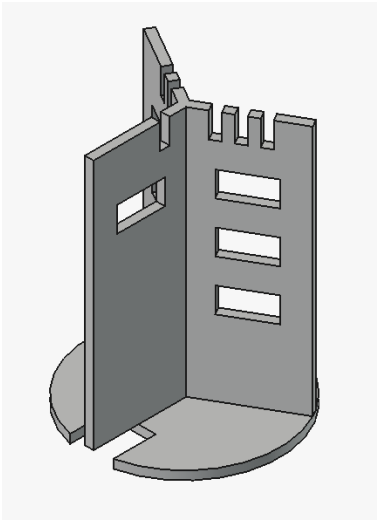

SeparatorThree_loader

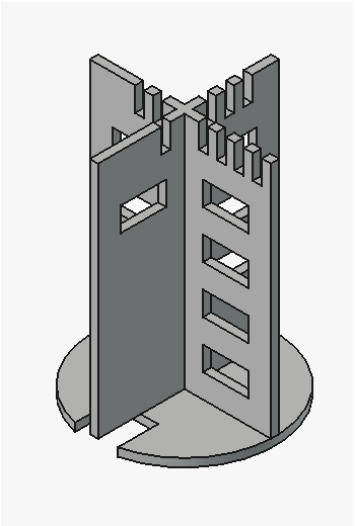

SeparatorFour_loader

2. Loader design
SeparatorTwo_loader



spreadsheet
main part to export

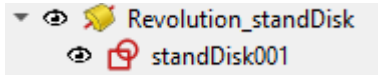

stand disk

diameter : formula
inner diameter user defined E2 – margins

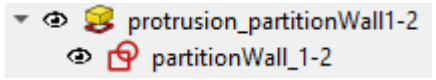

wall to discriminate samples

height : formula
sample height user defined B2 – margins



holes to check the sample positioning

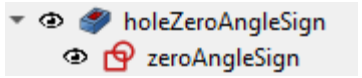

squared zero sign for a correct positioning inside a level

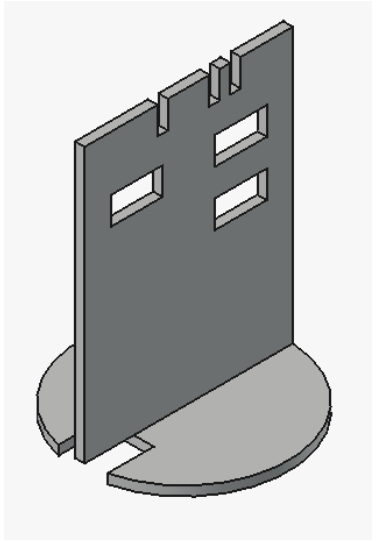

2. Loader design
SeparatorThree_loader

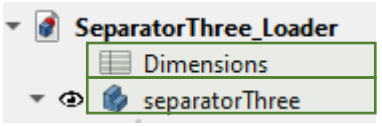

spreadsheet
main part to export

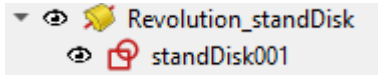

stand disk

diameter : formula
inner diameter user defined E2 – margins

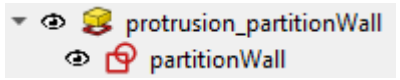

wall to discriminate samples

height : formula
sample height user defined B2 – margins

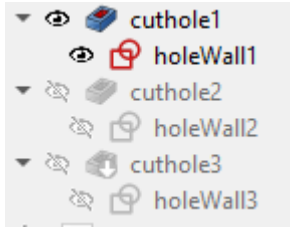

holes to check the sample positioning

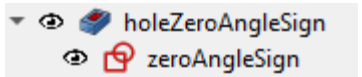

squared zero sign for a correct positioning inside a level

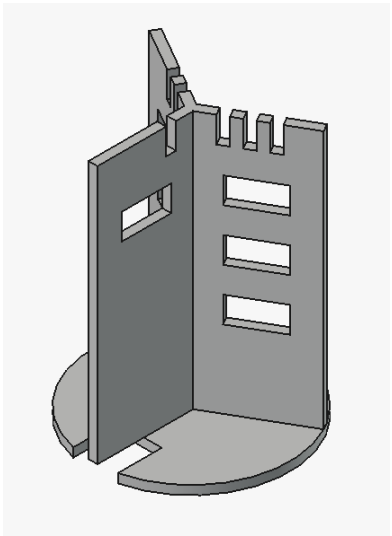

2. Loader design
SeparatorFour_loader



spreadsheet
main part to export

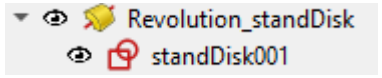

stand disk

diameter : formula
inner diameter user defined E2 – margins



wall to discriminate samples

height : formula
sample height user defined B2 – margins

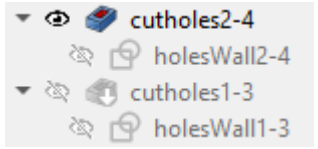

holes to check the sample positioning

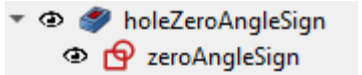

squared zero sign for a correct positioning inside a level

